TP INOX

Product with added value. Inox.

Frame, levers and pump made entirely in INOX AISI 304/316 stainless steel or anticorrosive material.

- steering angle 200°
- special versions made on request
- small roller under forks to help entry under bottom board pallets

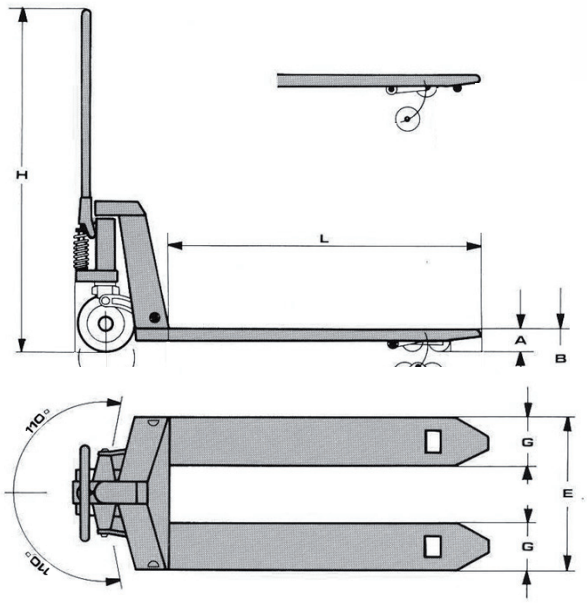

A	B	E	G	H	L
85	200	520	160	1225	1130

Technical details

- Capacity Kgs 2000
- Steering wheels 180x105 mm
- Single load rollers 82x102 mm
- Double load rollers 82x70 mm
- Pallet entry roller 60x20 mm
- Weight Kgs 69

samag®
FACILE TRASPORTARE.

PS INOX

PS INOX

Product with added value. Inox.

Electric stacker truck with manual traction

Entirely contructed in INOX stainless steel or anticorrosive material (including lifting chain, pulley, bearings on wheels and mast rollers)

Exclusive masts for SAMAG, in laminated INOX stainless steel highly resistant to flexion and torsion and with quality certificate

Lift cylinder constructed entirely in INOX stainless steel or anticorrosive material

Tighthold bonnet with global protection grade against water sprays.

Manual traction

- electric lifting with starting 12V 100 Ah battery
- on request, driving type battery
- on request, special dimensions

OVERALL DIMENSIONS OF LIFTING GROUPS							
TYPE	SOLL.	Q/KG	h3	h2	h1	h4	h4 GRID
NON TELESC.	1700	1000	1620	1620	2080	2105	2510
DUPLEX D	2500	1000	2425	170	1750	2910	3315
	3000	1000	2920	176	2000	3405	3810
	3500	700	3420	196	2260	3905	4310

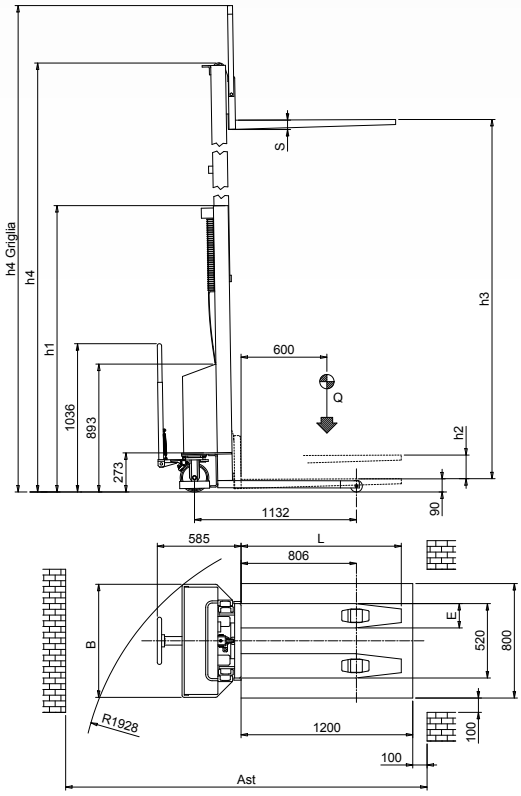

Technical data

Q	capacity	kg	1000
C	loadcentre	mm	600
L	fork lengths	mm	1120
	fork widths	mm	520
E	indiv.fork width	mm	170
S	fork thickness	mm	60
h2	free lift	mm	176
h3	lift height	mm	1700-3500
B	width	mm	790
Ast	aisle width	mm	2546

SAMAG products and brochure specifications are subject to change without notice.

samag®
FACILE TRASPORTARE.

SAMAG INDUSTRIALE S.r.l.
Località Pagana - 29017 Fiorenzuola D'Arda - PC - ITALY
Tel. 0523.981598 - Fax 0523.943128
info@samag.it

www.samag.it

09/12